COOL FLAME

BOX 1800 TUNNEL

for Water Vapour Fireplace with Lumisty

READY-MADE RECESS FINISH

A complete solution that defines proportions while adding architectural depth and a well-considered structure to the wall. The ready-made box reduces installation time and delivers a cohesive, refined visual result.

SEAMLESS MATERIAL INTEGRATION

Designed to ensure harmonious and effortless integration with finishing materials, decorative surfaces, and fireplace cladding. The box naturally blends into the wall architecture, creating a unified interior composition.

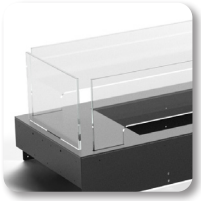

DRAFT PROTECTION FOR THE FLAME

The structure is equipped with sliding glass panels that protect and stabilize the flame against air drafts in open installations without a back wall, such as island or room-divider setups. This removes the need for drilling or interfering with the platform or decorative materials.

MINIMALIST FLAME DISPLAY

A dark, contrasting background enhances the flame's appearance and visual impact. The enclosure removes visual distractions and unwanted ceiling reflections, keeping the flame in an elegant recess and as the interior focal point.

All product specifications and data are subject to change without notice and are believed to be accurate as of the date hereof. Planika Sp. z o.o., its affiliates, agents, and employees, and all persons acting on its or their behalf (collectively, "Planika Sp. z o.o."), disclaim any and all liability for any errors, inaccuracies or incompleteness contained in any document or in any other disclosure relating to any product. To the maximum extent permitted by applicable law, Planika Sp. z o.o. disclaims any and all liability arising out of the application or use of any product. No license, express or implied, by estoppel or otherwise, to any intellectual property rights is granted by this document or by any conduct of Planika Sp. z o.o.. Customers using or selling Planika Sp. z o.o.'s products not expressly indicated for use in such applications do so entirely at their own risk and agree to fully indemnify Planika Sp. z o.o. for any damages arising or resulting from such use or sale. The provided fuel consumption is based on laboratory testing on the lowest flame level. The actual consumption of individual devices may vary. The images are indicative only.

© Copyright 2026, Planika Sp. z o.o. All rights reserved.

COOL FLAME

Box 1800 Tunnel

Dedicated insert models	PD 1500 | PD Pro 1500
Flue	not required
Finish	black powder coating
Materials	steel, glass
Application	for indoor use only

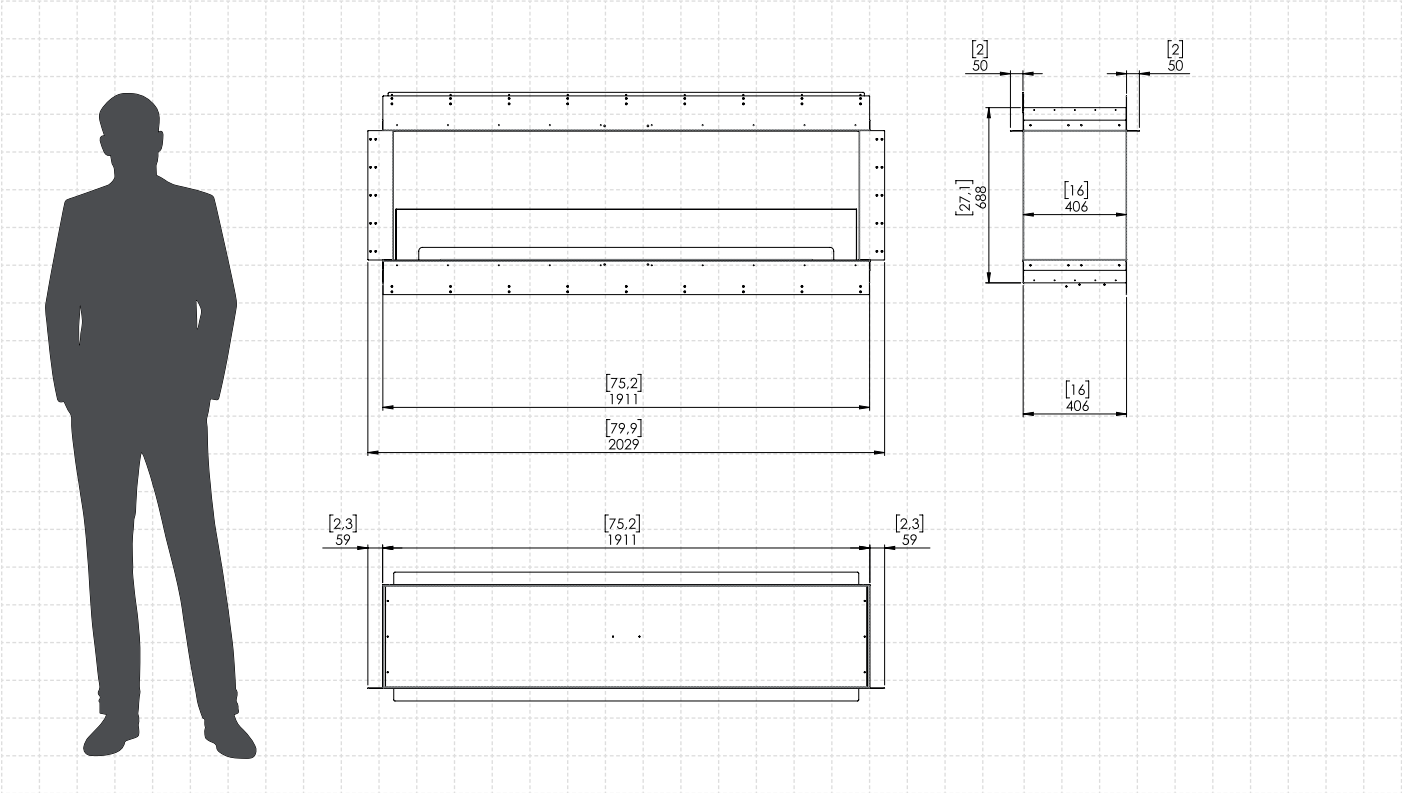

All product specifications and data are subject to change without notice and are believed to be accurate as of the date hereof. Planika Sp. z o.o., its affiliates, agents, and employees, and all persons acting on its or their behalf (collectively, "Planika Sp. z o.o."), disclaim any and all liability for any errors, inaccuracies or incompleteness contained in any document or in any other disclosure relating to any product. To the maximum extent permitted by applicable law, Planika Sp. z o.o. disclaims any and all liability arising out of the application or use of any product. No license, express or implied, by estoppel or otherwise, to any intellectual property rights is granted by this document or by any conduct of Planika Sp. z o.o.. Customers using or selling Planika Sp. z o.o.'s products not expressly indicated for use in such applications do so entirely at their own risk and agree to fully indemnify Planika Sp. z o.o. for any damages arising or resulting from such use or sale. The provided fuel consumption is based on laboratory testing on the lowest flame level. The actual consumption of individual devices may vary. The images are indicative only.

© Copyright 2026, Planika Sp. z o.o. All rights reserved.